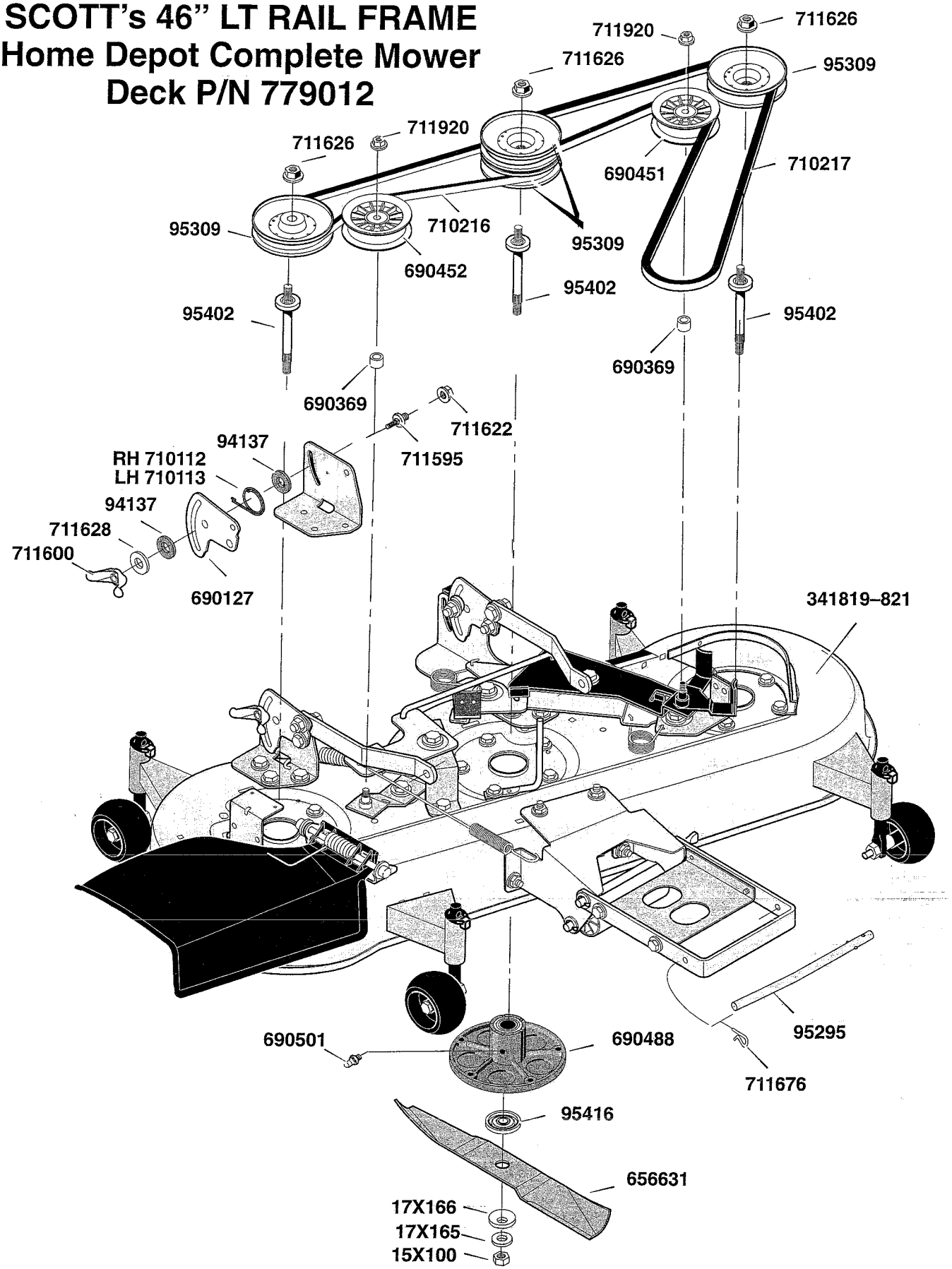SCOTT's 46" LT RAIL FRAME Home Depot Complete Mower Deck P/N 779012