REPAIR PARTS

SEARS TRIMMER MODEL 358.791580

WARNING

All repairs, adjustments and maintenance not described in the Operator's Manual must be performed by qualified service personnel.

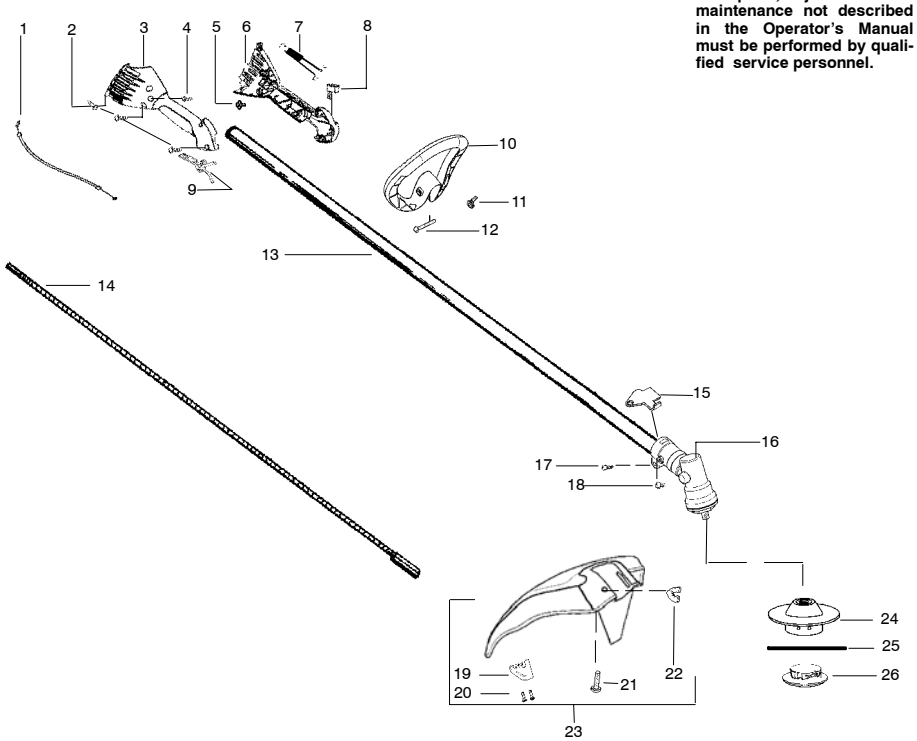

Ref.	Part No.	Description	Ref.	Part No.	Description
1.	530058962	Assy-Throttle Cable	21.	530015820	Bolt
2.	530015886	Screw	22.	530016152	Wingnut
3.	530057983	Throttle hsg-right	23.	530071765	Kit-Shield Assy. (incl.19,20)
4.	530015805	Screw-shaft Alignment	24.	71-85740	Head-Cutting
5.	530016326	Screw-Cable Retention	25.	----	Tube - Twisted Line
6.	530057984	Throttle hsg-left		71-85908	Red Line
7.	530058843	Assy-Front Wire		71-85909	Black Line
8.	530071356	Kit-Switch	26.	530096039	Plate-Glide
9.	530058759	Trigger			
10.	530057546	Handle-Assist			
11.	530016152	Wingnut			
12.	530015786	Bolt			
13.	530096252	Assy-Driveshaft		Not Shown	
14.	530096203	Shaft-Flex			
15.	530057554	Bracket-Shield			
16.	530096099	Assy-Gearbox		530164361	Operator Manual
17.	530016014	Screw		530055574	Decal-Shaft Warning
18.	530016224	Screw		530056414	Decal-Start Inst.
19.	530052285	Limiter-Line			
20.	530015814	Screw			

REPAIR PARTS

WARNING

All repairs, adjustments and maintenance not described in the Operator's Manual must be performed by qualified service personnel.

SEARS TRIMMER MODEL 358.791580

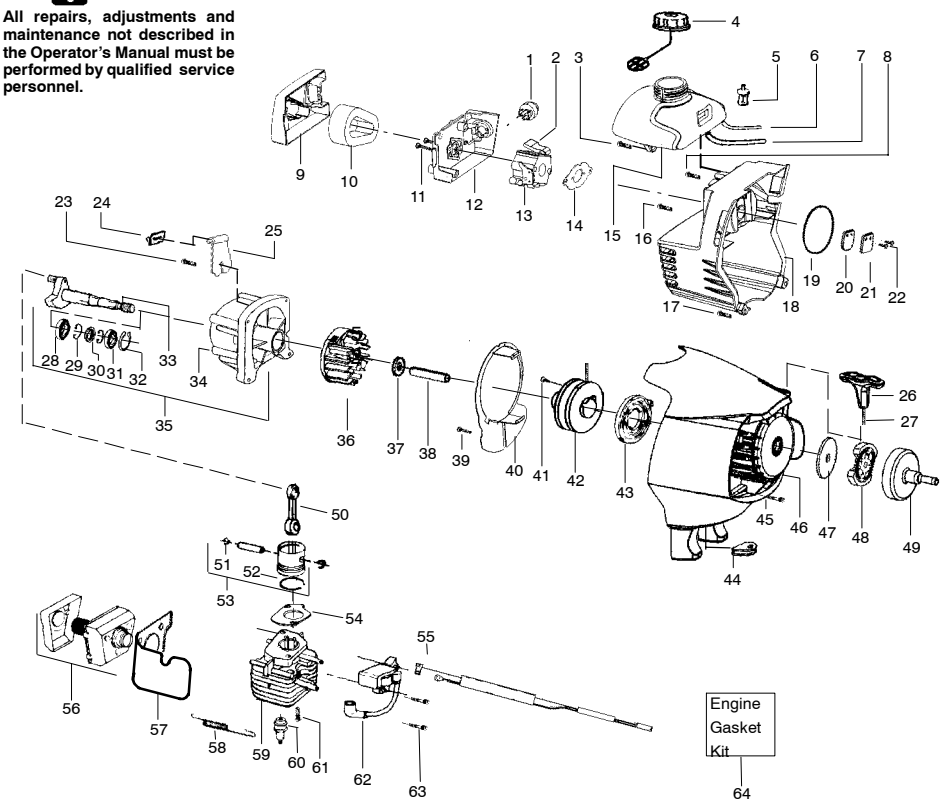

Ref.	Part No.	Description
1.	530047721	Bulb-Purge
2.	530071717	Kit-Choke Lever
3.	530015843	Screw-tank
4.	530049386	Cap-Fuel w/ret.
5.	530014362	Assy-Fuel pickup
6.	530071404	Kit-Fuel line
7.	530069216	Kit-Fuel/Purge line
8.	530015775	Screw
9.	530054935	Cover-Air box
10.	530054946	Filter-Air
11.	530015849	Screw-Carb.
12.	530054934	Box-Air
13.	530071637	Assy-Carb(WT628)
	(Note: Repair kits are not available for this carburetor)	
14.	530071401	Gasket-Carb.(kit)
15.	530055320	Assy-Fuel Tank
16.	530015771	Screw-Crankcase
17.	530015952	Screw-Shroud
18.	530058797	Shroud
19.	530071401	O-ring-Shroud (kit)
20.	530027593	Valve-Reed
21.	530054596	Stop-Reed
22.	530016064	Screw-Reed stop
23.	530015875	Screw-Retainer
24	530055492	Isolator-Tank
25.	530054941	Ret.-Tank
26.	530054834	Handle-Starter
27.	530071325	Kit-Rope
28.	530032103	Bearing-Inner
29.	530015787	Retainer
30.	530019158	Seal
31.	530032102	Bearing-Outer
32.	530015789	Ret.-Crankshaft
33.	530028807	Assy-Crankshaft
34.	530012514	Assy-Crankcase
35.	530071685	Assy-C'case/C'sft (incl.28-34)
36.	530055524	Assy-Flywheel
37.	530016030	Washer
38.	530055620	Spacer
39.	530015775	Screw-Baffle
40.	530054939	Plate-Baffle
41.	530016391	Screw-Rope
42.	530071399	Kit-Pulley(incl.41)
43.	530042086	Spring-Starter
44.	530019182	Grommet
45.	530015810	Screw-F/hsg.
46.	530059278	Assy.-Fan Housing
47.	530094189	Washer
48.	530055122	Assy-Clutch
49.	530028799	Drum-Clutch
50.	530010960	Assy-Conn. Rod
51.	530015162	Ret.-Piston pin
52.	530025875	Ring-Piston
53.	530069275	Kit-Piston (incl. 51-52)
54.	530071401	Gasket-Cylinder(kit)
55.	530058846	Assy-Leadwire
56.	530069310	Kit-Muffler
57.	530058957	Shield
58.	530036409	Spring-Muffler
59.	530071582	Kit-Cylinder
60.	71-85920	Plug-Spark(RCJ-6Y)
61.	530001624	Bolt-Cyl. 1/4-20"
62.	530039218	Module-Ignition
63.	530016357	Screw-Module
64.	530071401	Kit-Gasket (incl. 14,19, 54)